AQUAPHOR®
water filters

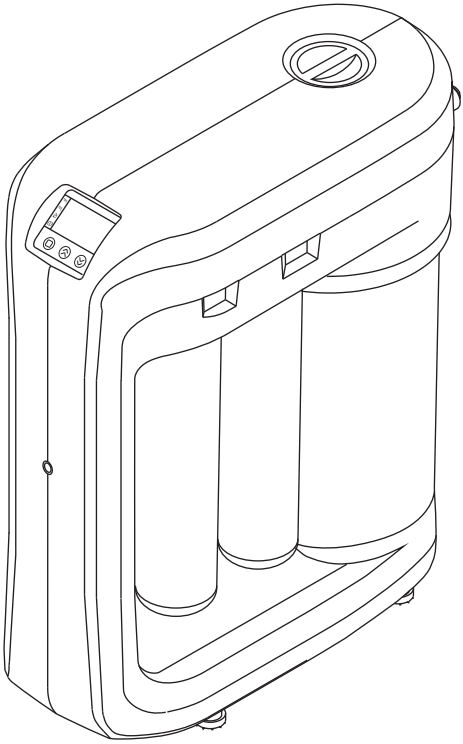

RO-206S PRO

REVERSE OSMOSIS SYSTEM

Operation manual

WARNING

Please read this manual carefully before you proceed with the installation. Your failure to follow any of the attached instructions or operating parameters may lead to the product's failure and possible property damage.

Save the manual for future reference.

Thank you for your purchase of RO-206S Pro (hereinafter referred to as RO). With proper installation and maintenance, this system will provide you with premium quality drinking water. The technology used in the RO enriches the filtered water with minerals in controlled quantities.

This water is highly beneficial for the body as it helps to normalize the physiological processes.

If you have any questions or concerns, please contact our customer service department at email sales@aquaphor.com. We are always happy to answer any questions you may have regarding our product.

1. INTRODUCTION

RO operates by removing contaminants from water at the molecular level. By using your household water pressure to squeeze the water against a special membrane, the water molecules are separated from any impurities that exist.

Rejected dissolved solids are automatically rinsed away through the drain leaving you with only high-quality, delicious water for your use.

2. SPECIFICATION DATA

Overall dimensions (length × height × width):	411 × 486 × 195 mm
Water supply pressure, min	90 kPa
Water supply pressure, max	0.63 MPa
Filtered water temperature	+ 5 to + 38 °C
Reverse osmosis membrane maximum efficiency rate (at +25 °C and 0.4 MPa)	47.2 l/h (for 2 membrane cartridges)
Treated/drained water ratio (at a water temperature not lower than 20 °C)	1:2–1:4
Weight, not more than	12 kg

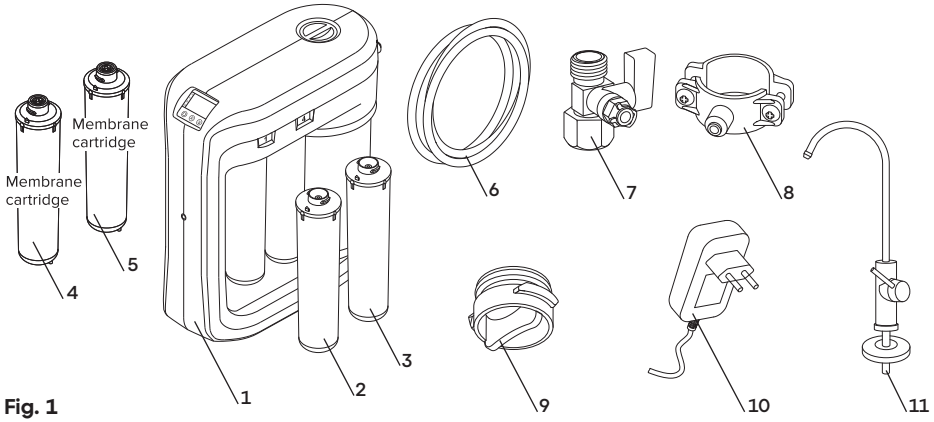

Fig. 1

3. PRODUCT ASSEMBLY (FIG. 1):

Nº	Name			Quantity
1	RO Pro housing assembly (1)			1 pc.
2	**Cartridges:**			
	2.1	**Pre-treatment unit:**		
		2.1.1	Pro 1 replaceable filter cartridge (3)	1 pc.
		2.1.2	Pro 2 replaceable filter cartridge (2)	1 pc.
	2.2	**Reverse-osmosis membrane unit:**		
		2.2.1	Replaceable membrane cartridge Pro 150 (4, 5)	2 pcs.
3	**Connecting pipes (6)**			
	3.1	1/4” tube (d 6.35 mm, L=1.3 m)		1 pc.
	3.2	1/4” tube (d 6.35 mm, L = 1.2 m)		1 pc.
	3.3	1/4” tube (d 6.35 mm, L = 1.0 m)		1 pc.
4	Connecting assembly (7)			1 set
5	Drain clamp (8)			1 set
6	Service plug (9)			2 pcs.
7	Power supply unit (10)			1 pc.
8	Clean water faucet (11)			1 set
9	Operation manual			1 pc.

Key specifications of the Power supply unit:

Input voltage	100-240 V AC
Built-in input plug	CEE 7/16
Output voltage	24 V DC
Output current	5 A
Coaxial output connector	Ø 2,5 × Ø 5,5 mm
Power lead length, not less than	1.0 m

4. DESIGN AND FUNCTIONS OF RO

1. The **RO** housing (1) consists of a top plate, a cover, a stand, a storage tank and a front panel. Four collectors (fot the removable filter cartridges) and a hydraulic unit are fixed in the top plate. The top plate is covered with a decorative cover, equipped with a handle fixing the cover in its central part. A pump is installed on the lower part of the housing (stand) to increase the water pressure in RO.

   RO is equipped with a storage tank for treated water to provide the desired water quantity at any time.

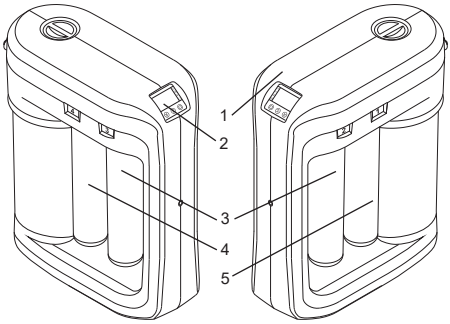

Fig. 2. Main units of R:
1 – RO housing assembly;
2 – Control unit;
3 – Pre-treatment unit Pro 1;
4 – Pre-treatment unit Pro 2;
5 – Reverse-osmosis membrane units.

At the front, the RO housing is covered with a decorative panel where an electronics unit and control elements are located.

2. **Control unit (2).** To display digital values of various parameters, the RO is equipped with a segment LED display with convenient menu navigation (cursor movement + selection).

   This model is distinguished by the installed TDS sensors for assessing the quality of filtration, the presence of a flow meter for more accurate determination of the resource of the modules and the ability to configure the necessary operating parameters.

3. Pro 1 and Pro 2 replaceable filter cartridges are part of the **water pre-treatment unit** (3, 4). The water pre-treatment unit is designed to remove impurities from the water such as iron hydroxide and active chlorine that can damage the reverse osmosis membrane.

4. The **reverse osmosis membrane unit** (5) includes two replaceable membrane cartridges. The reverse osmosis membrane unit removes organic, inorganic compounds and salts from water as well as softens it.

ATTENTION! The RO performance depends on the pressure in the water supply system. No proper operation of RO is guaranteed at pressures below 90 kPa in the water supply system.

ATTENTION! Air-gap device must be used in connecting your RO system to the drain pipe (in accordance with EN 1717 and NSF/ANSI 58 requirements).

ATTENTION! The RO performance depends on the pressure in the water supply system. No proper operation of RO is guaranteed at pressures below 90 kPa in the water supply system.

5. RO INSTALLATION

ATTENTION! Only install your RO by a qualified plumber who is certified to perform the installation in accordance with state law.

Locate the appropriate installation place for the faucet and RO. Take care to ensure that the delivery tubes are pulled freely, without over bending. RO must be installed on a flat, even solid surface as installation on an uneven surface may cause vibration or noise. Additionally, RO must be located away from heat sources, such as kitchen ovens, hot water supply pipes, dish 6 washers or washing machines, or at least isolated from such heat sources.

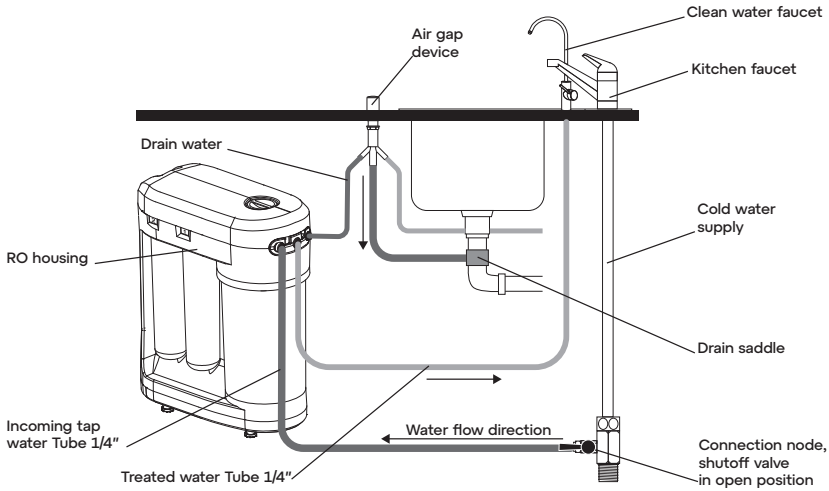

Fig. 3a. RO installation scheme

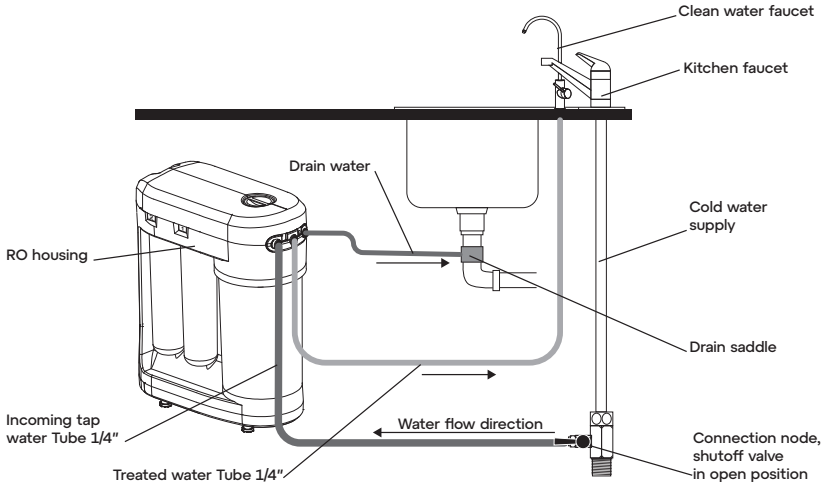

Fig. 3b. Optional RO installation scheme (only for countries where EN 1717 or NSF/ANSI 58 is not mandatory)

Attention! Air-gap device must be used in connecting your RO device to the drain pipe.

Without the air gap, wastewater could siphon back into the drinking supply. This can happen when a city main is shut off, causing a drain-down of the system with plumbing done improperly. lease connect drain tube with air-gap device (not included in delivery set). lease use Fig. 3a to connect your RO. You may use the same air-gap device as for your dishwasher machine or order special air-gap for RO system. Please contact with service to receive more information.

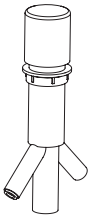

Installation of the connecting assembly*

- Turn water off at the mainline.
- Open the kitchen faucet to relieve pressure in the water supply system.
- Unscrew the clamping nut of the flexible hose from the cold water supply line to the faucet.

ATTENTION! The flexible hose may contain a little water after depressurizing. When disconnecting the flexible hose, use a 200 ml vessels to drain the residual water.

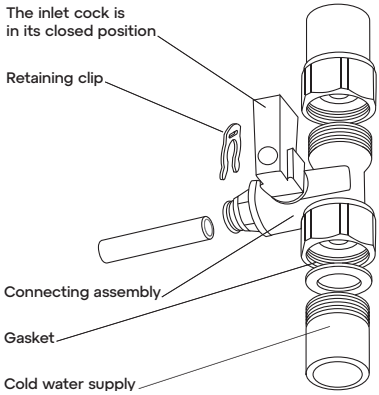

Fig. 4

- Screw the clamping nut of the connecting assembly onto the thread of the cold water supply.
- Screw the clamping nut of the flexible hose onto the thread of the connecting assembly.
- Close the inlet cock of the connecting assembly and supply water from the cold water supply line to make sure that the connection is tight.
- Connect the corresponding tube.

* The manufacturer reserves the right to use connecting assemblies and taps of a similar design. If you have any questions, please, contact the service department.

ATTENTION! The end of the pipeline must be flat, where the connecting assembly is connected. Do not use excessive force when tightening the clamping nut.

Otherwise, it will damage the gasket.

Connection of tubes (Fig. 5a)

Pull the locking clip (2) off the plastic plug (1). Then install the previously wetted end of the tube (3) into the fitting piece approx.15 mm up to the stop. Next, put the locking clip (2) back.

Make sure that the tube is properly fixed, it must be secured, it should hold applied force of 80–90 N.

Disconnection of tubes (Fig. 5b)

Pull the locking clip (2) off the plastic plug (1), then pull the tube (3) out by applying pressure on the face of the connecting piece.

Clean water faucet installation (Fig. 6)

- Drill a hole in the sink (countertop) with a diameter of 11.5–12 mm.
- Place the decorative stand with gasket (2) on the threaded faucet bushing (1) and insert the faucet threaded bushing (1) into the faucet hole.
- From the bottom of the sink, put the rubber gasket (3) on the threaded bushing of the faucet and screw on the fixing nut (4).
- Remove the locking clips (2 pieces) from the connector (5).
- Insert the tube from the water purifier into the connector until it stops.
- Place the other end of the connector onto the threaded bushing of the faucet until it stops.
- Fixate the connector with the stopping clip.
- Check the strength of the tube and connector fastening: with a force of 80–100 N, the connector and the tube and should not be pulled out.

ATTENTION!

- When you replace the original tap with a different one, there may be noise when you open it, and clean water flow reduction from the tap may occur.

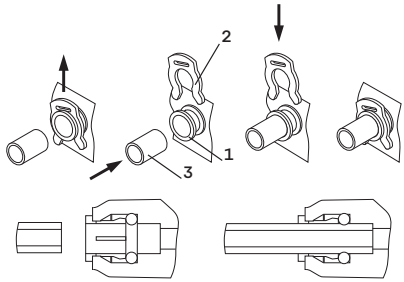

Fig. 5a

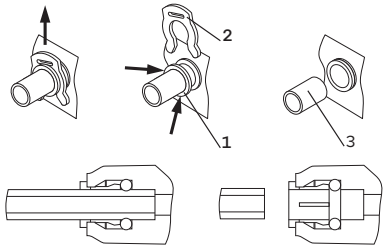

Fig. 5b

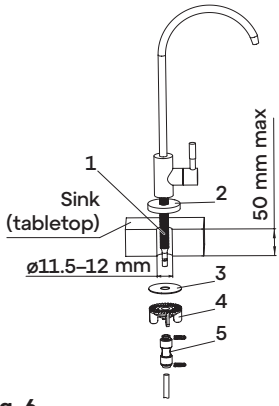

Fig. 6

- When you replace the original pipes with the longer ones, there may be noise and clean water flow reduction from the tap.
- If the water filter has not been used for a long time, the valves may turn on, making short-term noise. It is not a sign of the system malfunction.
- Open the clean water tap fully when you use the water filter, otherwise noise may occur. It is not a sign of the water filter malfunction.

Installation of the drain clamp* (Fig. 7)

- It is recommended to install the clamp on the sink drain upstream the S-trap (the drain clamp fits most drain pipes about 40 mm in diameter).
- Place the part of the clamp with the fitting (4) on the pipe and find the optimal position of the clamp and hole on the pipe.
- Drill a 7 mm hole in the pipe wall in the intended place.
- Remove the cut round part from the gasket (1).
- Remove the protective film (2) from the gasket (1). Attach the gasket (1) on the inside of the clamp so that the hole in the gasket aligns with the hole in the clamp fitting.
- Install the clamp on the pipe, aligning the hole in the fitting with the drilled hole in the pipe, and then tighten the bolts (3). The bolts should be tightened evenly so that the two parts of the clamp are parallel.
- Put the plastic nut on the drain tube so that the tube extends from the other side of the nut by at least 20 mm (Fig. 7b).
- Insert the tube into the drain clamp and screw the nut onto the fitting.

Note. Push the tube deeper into the pipe if you are disturbed by the sound of water coming from the drain clamp.

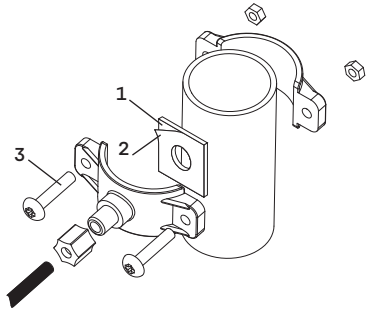

Fig. 7a

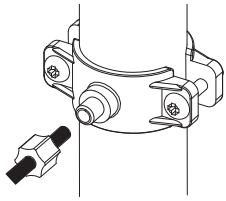

Fig. 7b

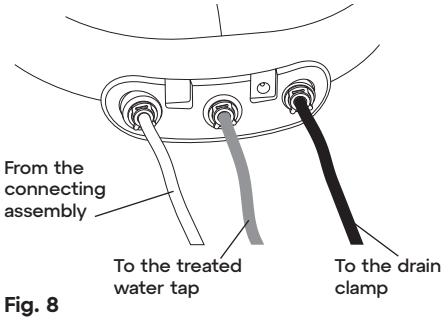

Fig. 8

6. STARTING RO

Step 1. Connecting inlet tubes

- Connect the inlet tubes according to the diagram shown in Fig. 8.

Step 2. Preparing your RO for use

- Remove the overwrapping film from the cartridges.
- Remove transport plugs (if any) from the cartridges.
- Rinse the O-rings of the cartridge under a water stream.
- The cartridges are inserted into the corresponding collectors until they stop and turn clockwise, as shown in Fig. 9a, until a click.

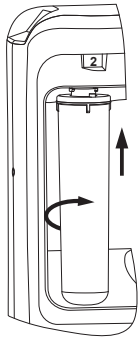

Fig. 9a

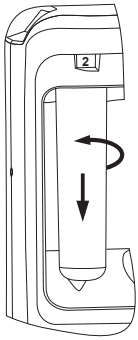

Fig. 9b

* The manufacturer reserves the right to use connecting assemblies and taps of a similar design. If you have any questions, please, contact the service department.

- To remove a cartridge, turn the cartridge counter clockwise, as shown in Fig. 9b, and remove it.
- Install the cartridges as shown in Fig. 10.
- Insert the plug of the power supply into the outlet, and the plug from the power supply into the socket in your RO unit (Fig. 11).

Step 3. Flushing the pre-treatment unit

- Open the treated water tap.
- Turn the inlet cock of the connecting assembly to its open position. The cartridge life indicator lights blink (the light signal is followed by an audible signal).
- To start the flushing, move the pointer on the display to the “flush” icon and press the confirmation button (see Appendix “RO Pro Control Unit”, item 7).
- First, air comes out of the system with some noise.
- Make sure the RO connections are tight.

ATTENTION! If leaks are found, immediately turn the inlet cock of the connecting assembly to its closed position and check the connections. Turn the inlet cock of the connecting assembly to its open position again to continue the flushing procedure after the leak is repaired.

- After the flushing procedure is complete, your RO beeps 5 times and switches into the operating mode automatically.
- Turn the inlet cock of the connecting assembly to its closed position and wait when the cartridge life light and sound indication turns off.

Step 4. Flushing the reverse osmosis membrane unit

- Remove the service plug from the slot of the reverse osmosis membrane unit and replace it with the membrane cartridge as shown in Fig. 12.
- Turn the inlet cock of the connecting assembly to its open position. The cartridge life indicator lights blink (the light signal is followed by an audible signal).
- Make sure the RO connections are tight.

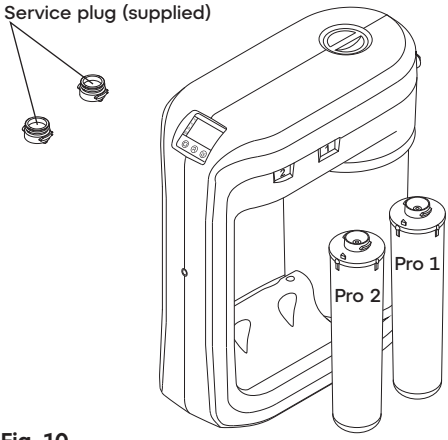

Fig. 10

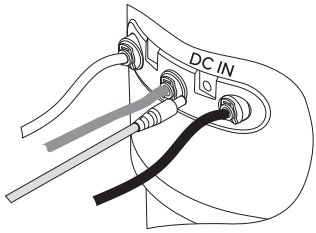

Fig. 11

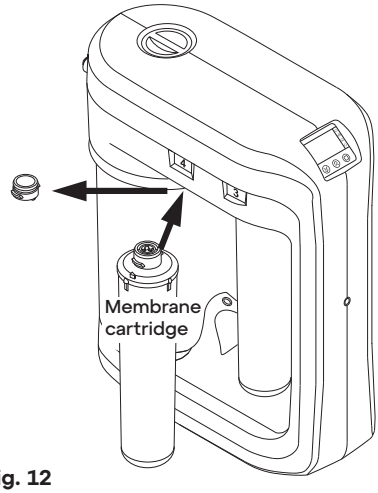

Fig. 12

Attention! If leaks are found, immediately turn the inlet cock of the connecting assembly to its closed position and check the connections. Turn the inlet cock of the connecting assembly to its open position again to continue the flushing procedure after the leak is repaired.

- Wait for the water to flow from the tap for treated water.
- Let the water through your RO for 1 hour.*
- Close the treated water tap.
- Fill and empty the storage tank 2 more times.
- Reset the resource of the installed cartridges by pressing and holding the confirmation button. (See the App. item 9 “Module resource reset mode”).
- Make sure the RO connections are tight.
- Your RO is ready for use once the tank is filled.

ATTENTION! The water is not intended for drinking after flushing.

Periodically check your RO for leaks during the first week of use. Some noise may occur during the first week of operation of your RO when switching the valve because of air released from the internal cavities of the system. This is not a malfunction.

7. REPLACING CARTRIDGES

Your RO is equipped with a light and sound indication of cartridge life.

The RO indication is configured to work with cold drinking water from municipal water supply systems that meet sanitary standards.

Information about the exhausted resource of cartridges is displayed on the RO display (see the App.).

The flashing indicator of the resource of the cartridge/cartridges (accompanied by a sound signal) indicates the cartridge to be replaced.

The indicators of cartridges that have not exhausted their resource do not flash.

Replacing of Pro 1, Pro 2 filter cartridges and the membranes cartridges

- Close the inlet cock of the connecting assembly and open the treated water tap. Wait until the cartridge life light and sound indication turns off.
- Remove the overwrapping film from the new cartridges.
- Rinse the O-rings of the new cartridge under a water stream.
- Remove the old cartridges. For this, press the lock button as far as it will go and hold it while turning the cartridge counter clockwise, as shown in Fig. 10b.
- Insert a new cartridge into the corresponding collector until it stops and turn clockwise, as shown in Fig. 10a, until a click.

After replacing filter cartridges of the water treatment unit and membrane unit

- Open the inlet cock of the connecting assembly.
- Make sure the RO connections are tight.
- Flush the replaced cartridged according to the corresponding scheme (see steps 3–4 of the section “Starting RO”). To activate the Flushing mode, use the navigation buttons to move the pointer to the “Flush” icon and press the confirmation button (see the Appendix “RO Control Unit”, item 7).
- After the flushing procedure is complete, your RO beeps 5 times and switches into the operating mode automatically.
- Reset the resource of the replaced cartridges, the indicators of which are flashing on the display, by pressing and holding the confirmation button.(See the App. unit 9 “Module resource reset mode”).

ATTENTION! Do not disconnect your RO from the power supply when in the flushing mode. Otherwise, the flushing process must be repeated.

* The whole flushing procedure of the membrane cartridge takes no more than 24 hours and depends on its storage and transportation conditions.

8. STORAGE TANK MAINTENANCE

Empty the tank before use if you have not used the RO for more than 2 days.

Empty and refill the tank 3 times for flushing before use if you have not used the system for more than 2 weeks.

Then, you can use the RO again.

ATTENTION! It is recommended to flush the storage tank with a disinfectant solution at least 1 time a year.

9. CONNECTION OF ADDITIONAL EQUIPMENT

The ability to connect additional equipment (ice machine, coffee machine, etc.) depends on the equipment`s requirements for the source water and the characteristics of the water at the inlet to the water purifier. If you need to connect additional equipment, please contact the service of the company Aquaphor or regional dealers of the company Aquaphor for advice.

Connecting an additional tank

In the general case, the connection diagram for an additional hydraulic accumulator tank is shown in Fig. 13.

Depending on the specific parameters of the accumulation tank and the connection conditions, it may be necessary to adjust the operating mode of the electronic RO control unit. Contact a service representative for advice.

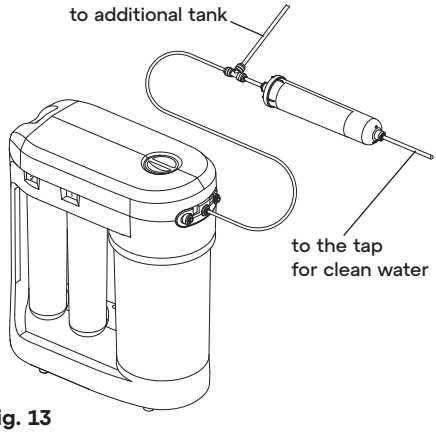

Fig. 13

10. STORAGE AND TRANSPORTATION RULES

The RO should be stored stored at +5 to +38 ºC, originally packed, in closed and naturally ventilated rooms at a relative humidity not exceeding 80%.

It is forbidden to turn the RO over, to hit or to expose to other mechanical stresses.

Protect your RO from shocks and falls, as well as not letting any water freeze when transporting, storing and using.

Do not expose the membrane cartridges to high or low temperatures and direct sunlight.

Attention! Membranes cartridges come in sealed packaging. It is allowed to store membrane cartridges for no more than 3 days after they are unpacked.

11. SAFETY

RO is designed to post-treat and soften water from municipal water supply systems that meet sanitary standards.

It is recommended to analyse the water source for compliance with national standards for drinking water when installing RO outside municipal water supply systems.

- The service life of the pre-treatment unit and the reverse osmosis membranes may be reduced if the source water does not meet the requirements of national standards for drinking water.
- It is recommended to install additional water treatment systems (iron removers, softeners, disinfectants, mechanical filters, etc.) if the source water significantly differs from the requirements of national standards for drinking water quality.
- It is recommended to use RO as a post-treatment unit for microbiologically safe water, although this reverse osmosis system can trap out bacteria and viruses from the source water. Do not use the

system to treat unknown water without additional disinfection. Empty and refill the tank 3 times for flushing before use if you have not used your system for more than 2 weeks. Treated water is not subject to long-term storage. It is recommended to use fresh filtered water.

It is disposed of in accordance with environmental, sanitary and other requirements set forth in national standards for environmental protection and ensuring the sanitary and epidemiological welfare of the population.

12. TERMS OF SERVICE AND WARRANTIES

Aquaphor Water Filters products are backed by some of the most comprehensive warranties in the industry. Aquaphor warrants that the Aquaphor water filtration system shall be free from defects in material and workman ship under normal use and service.

Aquaphor Reverse Osmosis System, Model RO – Two Years Warranty from the date of purchase. This does not apply, however, to consumable filters.

Exclusions and Limitations

5. Aquaphor warrants its products to be free from manufacturing defects under normal use and service. This warranty is extended only to the ORIGINAL PURCHASER.
6. Aquaphor obligations under this warranty are limited to repairs or replacement, at Aquaphor's option, of products or parts found to be defective, provided that such products were properly installed and used in accordance with instructions. Aquaphor reserves the right to make such inspections as may be necessary in order to determine the cause of the defect. Aquaphor will not charge for labor or parts in connection with warranty repairs for the first full year from date of purchase on all products except those that may be subject to commercial use limitations.
7. Aquaphor is not responsible for the cost of removal, return (shipping) and/or reinstallation of products.

This warranty does NOT apply to:

- Damage or loss which occurs during shipment.
- Damage or loss sustained through any natural or man-made causes beyond the control of Aquaphor, including but not limited to fire, earthquake, floods, etc.
- Damage or loss resulting from sediments or foreign matter contained in a water system.
- Damage or loss resulting from negligent or improper installation including installation of a unit in a harsh or hazardous environment.
- Damage or loss resulting from removal, improper repair, modification of the product, or improper maintenance including damage caused by chlorine or chlorine related products.
- Damage or loss resulting from acts which are not the fault of Aquaphor or which the Product is not specified to tolerate.

8. This warranty gives you specific legal rights. You may have other rights which vary from state to state.

THIS WRITTEN WARRANTY IS THE ONLY WARRANTY MADE BY AQUAPHOR. REPAIR OR REPLACEMENT AS PROVIDED UNDER THIS WARRANTY SHALL BE THE EXCLUSIVE REMEDY AVAILABLE TO THE PURCHASER.

AQUAPHOR SHALL NOT BE RESPONSIBLE FOR LOSS OF USE OF THE PRODUCT OR FOR OTHER INCIDENTAL, SPECIAL, FOR CONSEQUENTIAL DAMAGES OR EXPENSES INCURRED BY THE PURCHASER OR FOR LABOR OR OTHER COSTS DUE TO INSTALLATION OR REMOVAL OR COSTS OF REPAIRS BY OTHERS, OR FOR ANY OTHER EXPENSE NOT SPECIFICALLY STATED ABOVE. EXCEPT TO THE EXTENT PROHIBITED BY APPLICABLE.

LAW, ANY IMPLIED WARRANTIES, INCLUDING THAT OF MERCHANTABILITY, ARE EXPRESSLY LIMITED TO THE DURATION OF THIS WARRANTY. SOME STATES DO NOT ALLOW LIMITATIONS, SO THE ABOVE LIMITATION AND EXCLUSION MAY NOT APPLY TO YOU.

If you have any issue with the operation of your RO, please, contact the seller or the manufacturer.

Service life (operating time) of replaceable filtering cartridges:	
Name	**Service life (operating time)**
Pre-treatment unit	
Pro 1, Pro 2 cartridge	up to 6 months (1)
Reverse-osmosis membrane unit	
Replaceable membrane cartridge	1.5–2 years (2)
The data are based on the consumption of 10-12 litres of drinking water per day by a family of 3-4 people.	

(1) The service life (operating time) of the water pre-treatment cartridges may vary depending on the amount of impurities in the source water. The service life (operating time) of the cartridges is indicated for water that meets sanitary standards. Pro 1 and Pro 2 replaceable filter cartridges must be changed every 1-3 months if water entering your RO does not meet sanitary standards (with a high content of mechanical impurities). The RO light and sound indication is configured to work with water that meets sanitary standards.

(2) The service life of the membranes cartridges directly depends on the performance of the pre-treatment cartridges. Please, replace exhausted filter cartridges in a timely manner.

FAULT TABLE

Malfunction	Cause	Elimination method
No treated water or it is not enough. The storage tank is filled slowly or is not at all.	The replaceable cartridges of the pre-treatment unit are clogged.	Replace the cartridges of the pre-treatment unit.
	The replaceable membrane cartridge is clogged.	Replace the replaceable membrane cartridge.
	The power supply plug is not plugged into the outlet.	Insert the plug of the power supply into a power outlet.
	The power supply plug is not plugged into the coaxial connector of the RO.	Insert the power supply plug into the coaxial connector of the RO
	The inlet cock of the connecting assembly is closed.	Open the inlet cock of the connecting assembly
It is recommended to contact your service provider for any other malfunctions.		

APPENDIX: RO CONTROL UNIT

Appearance of the indicator panel

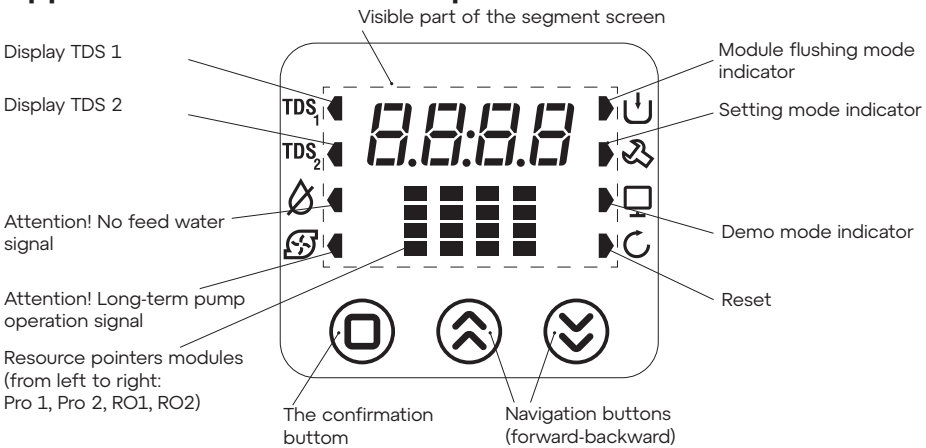

INDICATION ALGORITHM

The indication element (LCD display) operates in the following modes:

1. Standby mode (full tank)

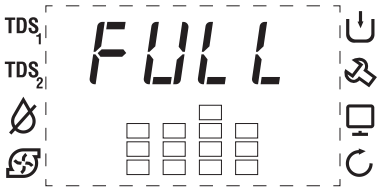

The mode is active when filtration is complete, the clean water tank is full and the pump is stopped.

The display shows:

- the inscription “FULL”;
- the state of the modules.

2. Tank filling mode

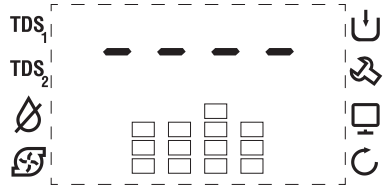

The mode is active during the pump operation and filling of clean water into the storage tank.

The display shows:

- running line;
- module status.

3. “No pressure at the input” mode

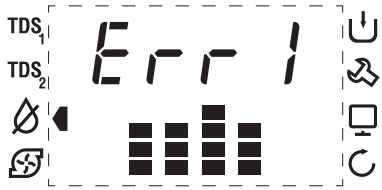

The mode is active when there is no pressure in the supply pipeline.

The display shows:

- “Err1” inscription;

- the error indicator is displayed;
- the state of the modules.

Accompanied by an intermittent sound signal.

4. “Pump shutdown” mode

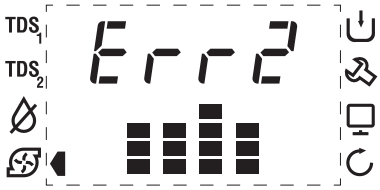

The mode is active when the pump operates for more than the set time, which indicates deviations in the system operation.

The display shows:

- “Err2” inscription;
- the error indicator is displayed;
- the resource status of the modules.

Accompanied by an intermittent sound signal.

The operation of the water purifier in this mode is blocked.

5. Input water quality display mode (TDS1)*

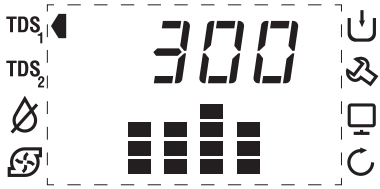

The mode is activated by pressing the confirmation button 1 time.

The display shows:

- TDS1 sensor readings;
- module resource status.

6. Display mode of water quality at the outlet of membrane cartridges (TDS2)*

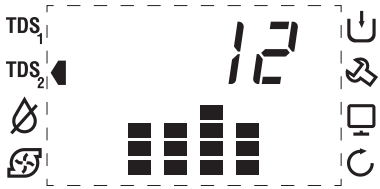

The mode is activated by pressing the confirmation button 2 times.

The display shows:

- TDS2 sensor readings;
- resource status of the modules.

7. Flushing mode

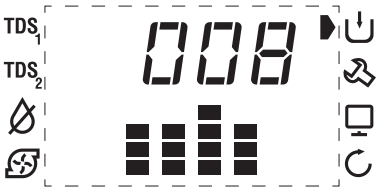

To activate the mode, use the navigation buttons to move the pointer to the “Flush” icon and press the confirmation button.

The display shows:

- The flushing indicator is displayed;

* Serves to assess the degree of purification by comparing TDS1 and TDS2.

- The time from the start of flushing (units of measurement are seconds);
- The resource status of the modules.

8. Setup mode

Used by service technicians. The display shows:

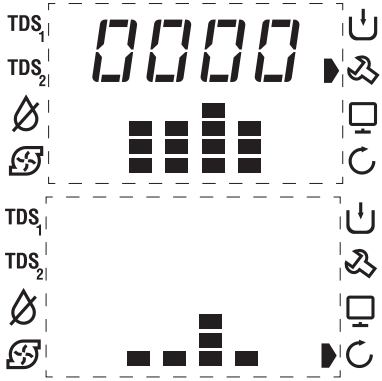

9. Module resource reset mode

The mode is activated automatically

when the module resource has expired.

The display shows:

- flashing indicators of modules whose resource has expired (accompanied by a sound signal);
- indicators of modules whose resource has not expired do not blink.

To reset the resource of modules whose indicators are blinking, use the navigation buttons to move the pointer to the “Reset” icon and press the confirmation button.

AQUAPHOR®
water filters

Reverse Osmosis System
Aquaphor RO-206S Pro

Manufacturer:
Aquaphor International OÜ
L. Tolstoi 2A, Sillamäe, Estonia, 40231.
www.aquaphor.com

The manufacturer reserves the right to make improvements to the design of the RO-206S Pro without being mentioned in this Manual.

The date of manufacture and quality control is indicated on the product's serial number label.

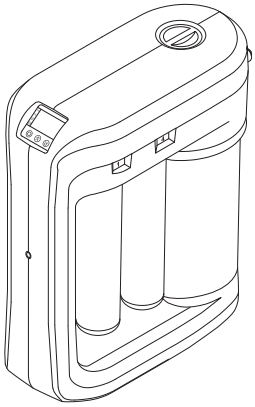

AQUAPHOR®

RO-206S Pro

24V ⎓ , 5 Amax
MAX 0.63 MPa
Made in Estonia

www.aquaphor.com

Product serial number

Sale Date / Store Stamp